# Outline Graph
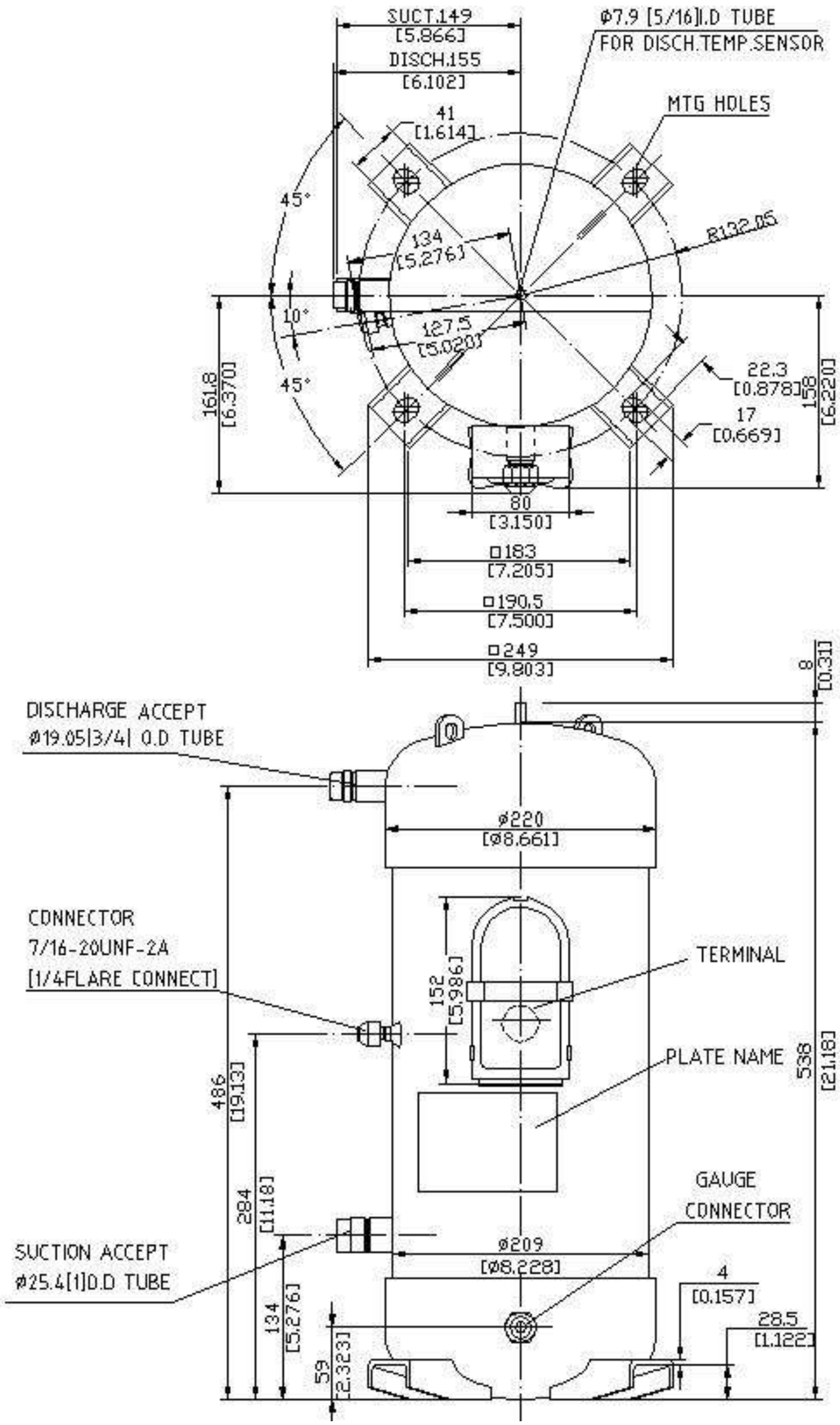
| | |
|---|---|
| Compressor Model | C-SCN673H8K |
| Compressor Code | 809 193 88 |
| Refrigerant | R407C |